Application Note

Trace Moisture and Carbon Dioxide in Natural Gas

Key Features

- *Responds quickly to process changes: no wet-up or dry-down times*
- *Avoids damage to the sensor from other components in the stream*
- *Virtually maintenance free operation with no routine service needed*
- *See product datasheet for more details*

H_2O In LNG Feed

Interest in Liquefied Natural Gas (LNG) has surfaced in the past 30 years due to higher demand in a number of countries around the world. Increased need in the United States and China and rising natural gas prices have made LNG transport more economically viable, giving rise to liquefaction processing capacity growth.

Roughly speaking, LNG is natural gas in a liquid form. It is composed primarily of methane, and it is stored at cryogenic temperatures -160º C (-260°F). Before the natural gas is processed, it is treated to reduce the levels of H_2O and CO_2. The presence of even trace amounts of moisture can threaten the integrity of equipment during compression and liquefaction of the natural gas due to ice formation. Similar problems arise for trace amounts of CO_2. Figure 1 shows a typical flow process of an LNG processing facility.

In this process, it is desirable to extend the life between regeneration of the mole sieve or to monitor performance of a glycol or amine contactor while avoiding contamination to the natural gas. This is done by monitoring the output of the bed or column to determine the breakthrough point, or the exact point at which the concentration of H_2O or CO_2 rises, meaning the desiccant is saturated. CO_2 can be a leading indicator of H_2O or vice versa but in any case it is essential to have very fast detection to improve the life of the desiccant while maintaining product quality.

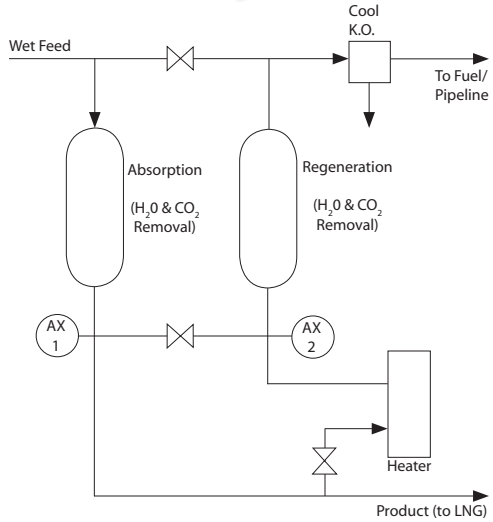

Figure 1: Flow diagram of Dehydration Process

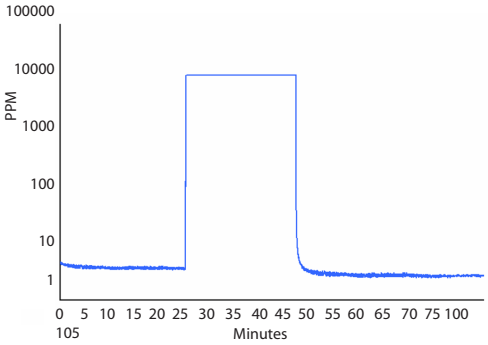

TDL Analyzers give nearly instantaneous response to changes in concentration

Our Solution

SpectraSensors' SS2100 analyzer employs a laser spectroscopy technique that measures trace amounts of a particular gas compound (H_2O in this case). The system consists of a cell that the sample gas flows through, a tunable laser diode that emits a specific wavelength of light through the gas, an optical detector, and software to analyze and output the results.

Changes in concentration during process upsets can be seen without the normal wet up and dry down delays seen in moisture probes. The TDL analyzer does not have the problem of desensitizing over time due to operation in very dry samples over long periods of time.

The TDL-based analyzers from SpectraSensors are quickly gaining a reputation in the process industry as a very reliable means of measuring moisture with no contamination, interference, or expensive consumable costs.

972 N. Amelia Avenue | San Dimas, CA 91773 | Tel: 800 619-2861 | Fax: 909 542-0402 | **www.spectrasensors.com**

SpectraSensors™